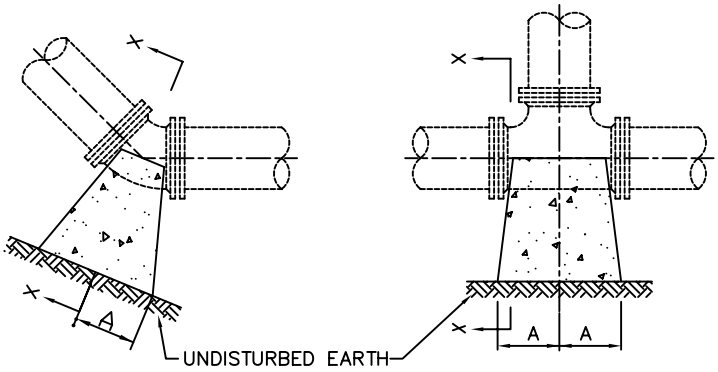

PLAN BENDS

PLAN TEES

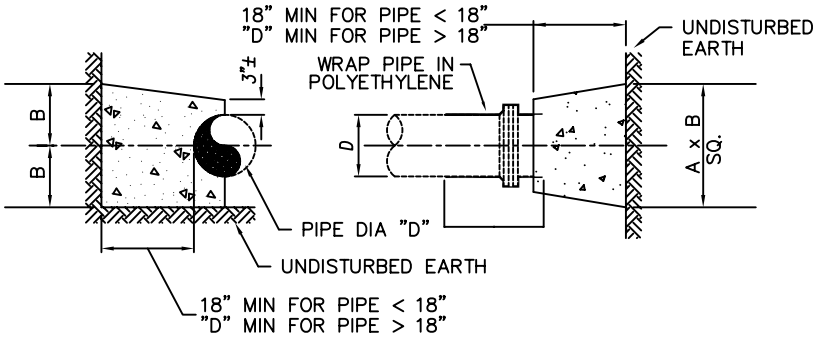

SECTION X–X BENDS & TEES

PLAN & ELEVATION PLUGS

SIZE	90° BEND		45° BEND		22 1/2° BEND		11 1/4° BEND		TEE		PLUG	
	A	B	A	B	A	B	A	B	A	B	A	B
2 1/2"	18"	12"	10"	13"	7"	10"	7"	10"	12"	14"	13"	6"
4	18"	12"	10"	13"	7"	10"	7"	10"	12"	14"	13"	6"
6	18"	12"	10"	13"	7"	10"	7"	10"	12"	14"	19"	9"
8	24"	18"	13"	18"	10"	12"	10"	12"	16"	18"	25"	11"
10	28"	22"	15"	22"	12"	15"	12"	15"	20"	22"	31"	14"
12	32"	28"	19"	28"	14"	18"	14"	18"	22"	28"	37"	17"

ALLOWABLE SOIL BEARING PRESSURE = 2000 PSF

NOTES:

1. BASED ON 200 PSI STATIC PRESSURE PLUS AWWA WATER HAMMER ALLOWANCE
2. ALL BEARING SURFACES TO BE CARRIED TO UNDISTURBED GROUND.
3. THRUST BLOCKS TO BE USED AT ALL LINES OPERATING UNDER PRESSURE.
4. KEEP ALL PIPING JOINTS CLEAR OF CONCRETE THRUST BLOCKS.

THRUST BLOCK DETAIL

NOT TO SCALE

TOWN OF LEXINGTON ENGINEERING/PLANNING