STANDARD PIPE BEDDING AND BACKFILLING DETAIL

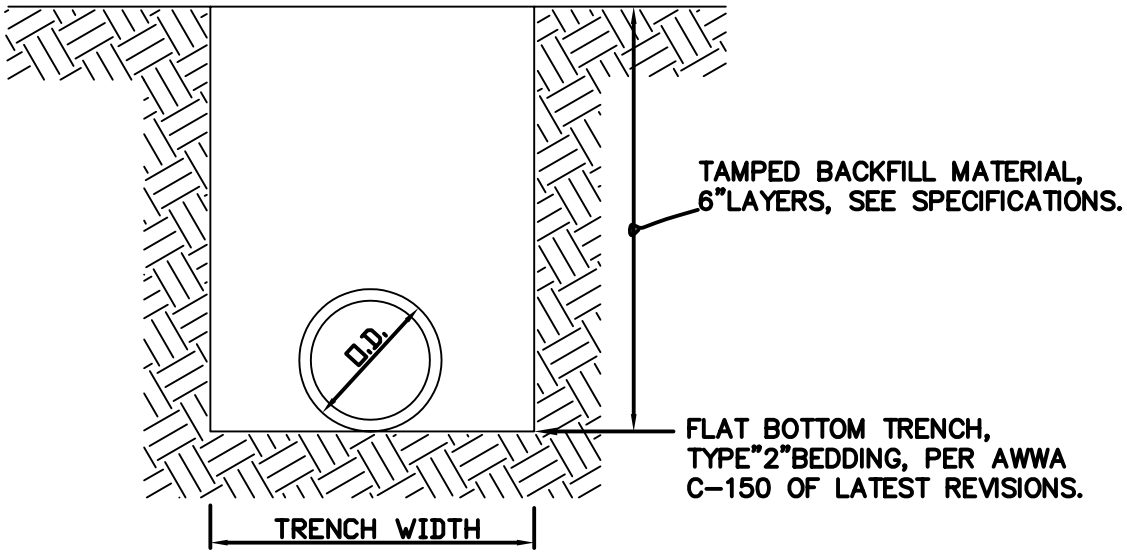

BACKFILL FOR DUCTILE IRON PIPE